ALCON LINK™
BE SMART ,BE SECURE

AL-5001-MPC-HD2LM-V2.0

2MP S+265 50M IR BULLET CAMERA

Tripwire, Perimeter, Smart 50M IR ,Sd card, Motion Detection

IN-BUILT MIC | H.265+ COMPRESSION | MOTION DETECTION | SMART DEFOG | HIGH LIGHT COMPENSATION | IP67 | PoE | IR-50MTR | FULL HD 1920X1080 | 3D DNR | TRIPWIRE | PERIMETER

OVERVIEW

Alcon Sleek Full HD IR Bullet Camera

The Alcon AL-5001-MPC-HD2LM-V2.0 Fixed Lens IP Camera with IR Illuminator provides high resolution images for round-the-clock surveillance over IP networks. It supports up to S+265 compression formats and delivers excellent picture quality in Full-HD 1920x1080p@30fps resolutions. Furthermore, the IP67-rated housing protects against rain and dust and ensure stable operation under extreme weather conditions. IR-Cut filter and built-in IR illuminators support upto 50MTR IR distance.It supports Power-Over-Ethernet. It is an ideal solution for outdoor and indoor surveillance applications such as school, college, hospital, training center,restaurant, conference hall etc.

FEATURES

- Default: Metal+Plastic
- Up to 1920x1080@30fps
- S+265/H.265/H.264
- Minillumination Color: 0.02Lux@F2.0
- Smart IR, IR Range: 50m
- Support tripwire and perimeter
- POE & IP67
- Operating Conditions -35°-65°, 0~95% RH
- Certification: BIS, CE & FC
- Built-in mic,Sdcard Upto512Gb,Reset Button

LATEST COMPRESSION S+265 TECHNOLOGY

ALCON cameras and NVRS are coming with S+265 can save approximate 80% bitrate than H.264 technology 100:20…80% less storage another new gen technology circuit making it extremely durable and best suitable for Industrial type installations.

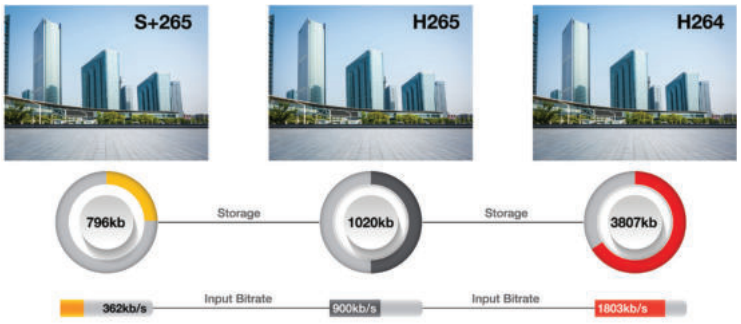

S+265 can save approximate 50% bitrate than H.265 technology, saves 70%-80% bandwidth compared with H.264

TRIPWIRE AND PERIMETER

The perimeter alarm is a trip wire activatedbooby-trap signaling device that can alert you when trespassers are on your property; This versatile, trip wire .

HIGH LIGHT CONTROL

Alcon HLC function is designed to allow camera view vehicle license plate. HLC stands for Hight-light compensation, this technology is designed to optimize the brightness of images through using digital signal processing.

SMART DEFOG

Alcon's Smart Defog image correction algorithm, improves the whole images visibilityand clarity even in very foggy weather.

PRIVACY MASKING

Privacy masking is a feature found in many IP cameras which is used to protect personal privacy by concealing parts of the image from view with a masked area. Examples of this use would be masking windows of domestic properties.

DIGITAL NOISE REDUCTION

Digital Noise Reduction (DNR) is a method by which the camera's imager digitally removes noise from the image. 3D DNR is an advancement of this technology which enables noise to be filtered even more effectively from the image, even in low light conditions.

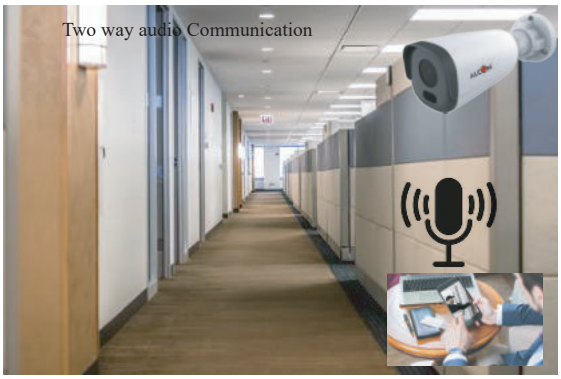

IN-BUILT-MIC

Alcon all camera series is coming with in-built Mic Features. Most CCTV cameras OEM products are coming without this features .where as this feature will give both Audio and video recording will be added advantages for the end user instead of only video recording.

SPECIFICATION

MODEL	AL-5001-MPC-HD2LM-V2.0
Image Sensor	1/2.9" CMOS
Signal System	PAL/NTSC
Min. Illumination	Color: 0.02Lux@ (F2.0, ACG ON), B/W: 0Lux with IR
Shutter Time	1s to 1/100,000s
Day & Night	Dual IR Cut Filter with Auto Switch
Angle Adjustment	Bracket, pan: 0° to 360°, tilt: 0° to 75°, rotate: 0° to 360°
LENS	
Lens Type	Fixed
Focus	4mm
Lens Mount	M12
Aperture	F2.0, Fixed
FOV	Horizontal field of view: 97.4° (2.8mm)/82.1° (4mm)
ILLUMINATOR	
IR LEDs	2
IR Range	Up to 50 m
Wavelength	850nm
White LEDs/Warmlights	N/A
COMPRESSION STANDARD	
Video Compression	S+265/H.265/H.264
Video Bit Rate	32 Kbps~6 Mbps
Audio Compression	G.711/G.711U/ADPCM
Audio Bit Rate	8K~48Kbps
IMAGE	
Max. Resolution	1920×1080
Main Stream	PAL: 25fps (1920×1080, 1280×720, 704×576, 640×480)
	NTSC: 30fps (1920×1080,1280×720, 704×480, 640×480)
Sub Stream	PAL: 25fps (704×576, 704×288, 640×360, 352×288)
	NTSC: 30fps (704×480, 704×240, 640×360, 352×240)
Third Stream	N/A
Image Setting	Saturation, brightness, contrast, sharpness, adjustable by client software or web browser
Image Enhancement	BLC/3D DNR/HLC
ROI	N/A
OSD	16×16, 32×32, 48×48, adaptable size, Letters Such as Week, Date, Time, Total 3 Regions
Picture Overlay	N/A
Privacy Mask	Yes, 4 regions
Smart Defog	Yes

FEATURE	
Alarm Trigger	Motion Detection, Mask Alarm, IP Address Conflict
Video Analytics	Tripwire, Perimeter
Early Warning(EW)	N/A
NETWORK	
Protocols	TCP/IP, HTTP, FTP, DHCP, DNS, DDNS, MULTICAST,IPV4, NTP, UDP, Telnet
System Compatibility	ONVIF(PROFILES/T/G), SDK, P2P (Mutually exclusive with Profile G)
Remote Connection	≤7
Client	Alcon Smart Surveillance, EasyLive
Web Version	Web5
INTERFACE	
Communication Interface	1 RJ45 10M/ 100M self adaptive Ether-net port
Audio I/O	Mic in
Alarm I/O	N/A
On-board storage	Built-in-Mic,Sd card Slot, Up to 512 GB
GENERAL	
Web Client Language	15 languages English, Russian, Spanish, Korean, Italian, Turkish, Simple Chinese, Traditional Chinese, Thai, French, Polish, Dutch, Hebraism, Arabic, Vietnamese
Operating Conditions	-35C°~65C°, 0~95% RH
Power Supply	PoE (802.3af)
Power Consumption	MAX:7W(POE)
Heater	N/A
Dimensions	160.8×68x74.5mm (6.33×2.68×2.93 inch)
Weight	: 0.35Kg(0.77lb)
Certification	BIS, CE & FCC

DIMENSIONS

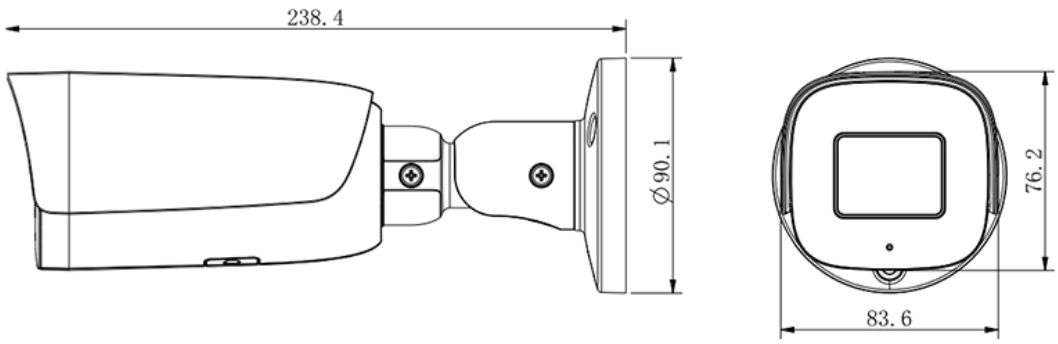

ORDERING INFORMATION

AL-5001-MPC-HD2LM-V2.0 2MP S+265 50M IR Bullet Camera

*Product specifications and availability are subject to change without notice.

© 2020 Alcon, All rights reserved.